TRX7

A NorCal 40A based 7 MHz CW Transceiver

January 27, 2006

Hans Gall, DK3YD

Author: Dipl.-Ing. Hans Gall
BAUSCH-GALL GmbH
Wohlfartstrasse 21 b
D-80939 Muenchen

Telephone: +49/89/3232625
Telefax: +49/89/3231063

email: `Hans.Gall@Bausch-Gall.de`
web: `www.Bausch-Gall.de`

Hans Gall is partner of BAUSCH-GALL GmbH, an engineering company in Munich, Germany, which he owns with his wife, Dr. Ingrid Bausch-Gall. He graduated from the Technical University Munich in Telecommunication and RF Technology in 1977. In 1981, he started working as a consultant for computer-aided RF circuit design. He is a member of the IEEE Microwave Theory and Techniques Society. He holds the german amateur radio call sign DK3YD since 1969 and the U.S. extra class call AF4AQ since 1997.

Contents

1 Introduction

The NorCal 40A [1] is a CW-transceiver operating in the frequency range from 7.00 MHz to 7.04 MHz, the 40 m amateur band. Wayne Burdick, N6KR, designed the NorCal 40 as a club project for the Northern California QRP Club. A complete kit for the NorCal 40A is available from the Wilderness Radio Company [1]. The design of the NorCal 40A is simple, open and very sound.

David Rutledge, KN6EK, has written an outstanding book titled ”The Electronics of Radio” [2] which introduces the reader to analog electronics by analyzing the design and construction of the NorCal 40A. I was fascinated by this book after I bought it in the Stanford University Bookstore in August 2001. My club friend Rainer, DL7BER, gave me his completed and working NorCal 40A to try it. It took until May 20, 2004, when I made my first QSOs using this rig on a short hike to the bavarian alps (Foto 1). While tuning across the band, I found another club member, Heinz, DL6MHT, calling CQ. I gave him a call and we made a nice long QSO. As he resides just around the mountain where I had my temporary QTH, he came up to me and also tried the NorCal 40A (Foto 2). The next hike took place on June 10 with Ben, DL6RAI, to Mount Bodenschneid (elev. 1668 m) near Lake Tegernsee in beautiful Upper Bavaria (Foto 3). The dipole antenna we used is shown in Foto 4.

Although I was quite satisfied with the performance of the NorCal 40A, I found it inconvenient to have to pack several boxes (NorCal 40A, keyer, SWR-Meter, etc.) into the rucksack and to have to connect the boxes with several cables before the first QSO could be made. I decided to build a transceiver based on the NorCal 40A but including an electronic keyer, frequency counter, Ni-MH battery back, etc. I wanted to build a better receiver mixer and an additional MOSFET PA with up to 10 W output power which could be activated when a stronger transmitted signal would be desirable. The project was named TRX7.

Another idea was to try to simulate the various subcircuits of the transceiver and to compare simulated and measured results. I have used the free Evaluation Version 8.0 of PSpice. I hope that some readers of this report might be stimulated to try simulation for the development of their own circuits.

I would like to thank the following amateurs at our club station DK0MN: Rainer Beer, DL7BER, for lending me his NorCal 40A; Heinz Trapmann, DL6MHT, and Ben Buettner, DL6RAI, for sharing with me the fun of operating QRP from our mountain hikes and son Leo for helping me in many ways during this project.

dk3yd.eps

Foto 1

dl6mht.eps

Foto 2

dl6rai.eps

Foto 3

dipole.eps

Foto 4

2 Block Diagram of NorCal 40A

block diagram, see [2], p.18, Fig 1.13

nc40a0.eps

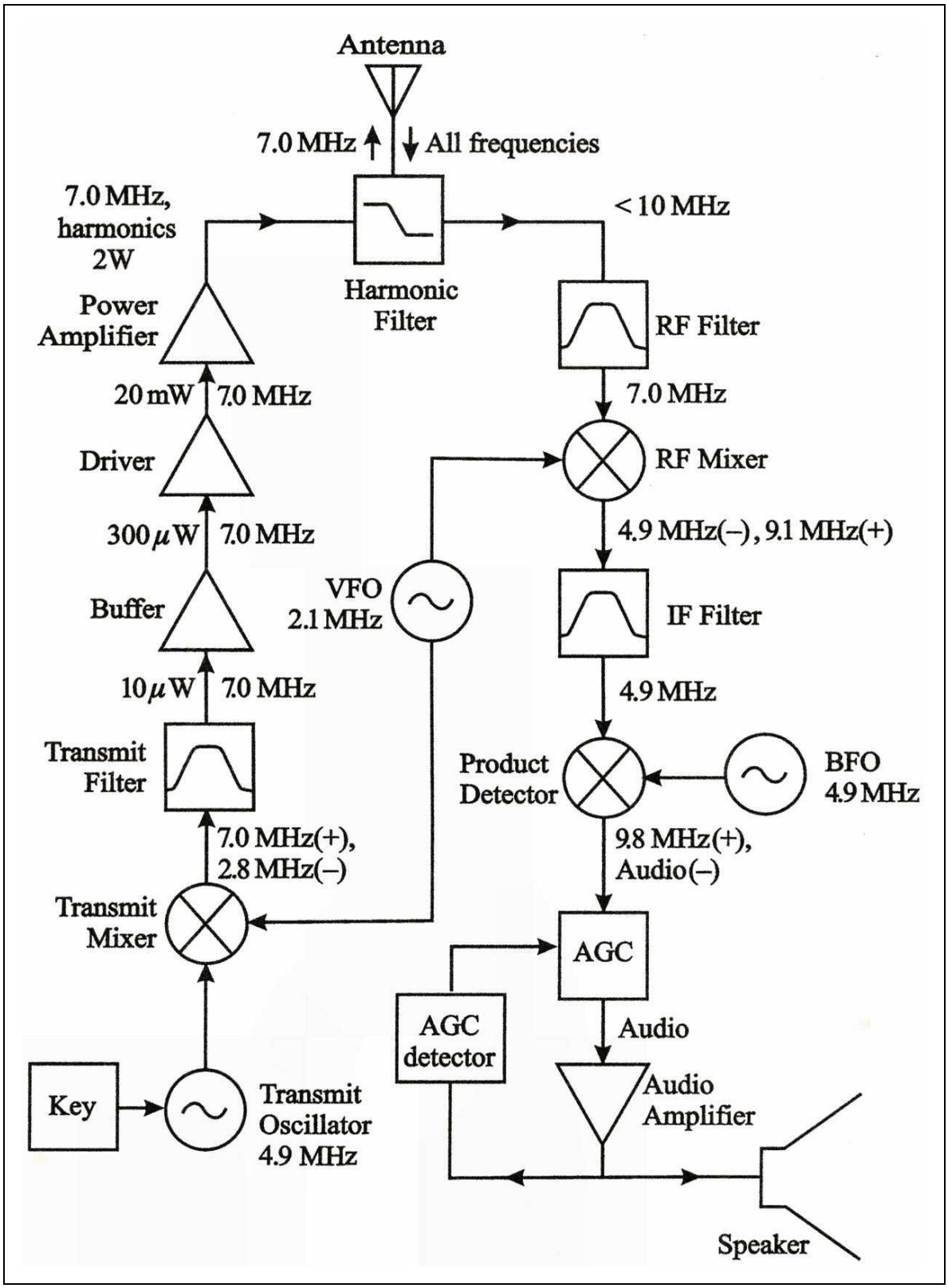

foto of NorCal 40A rev B (outside and inside)

nc40aos.eps

Foto 5

nc40ais.eps

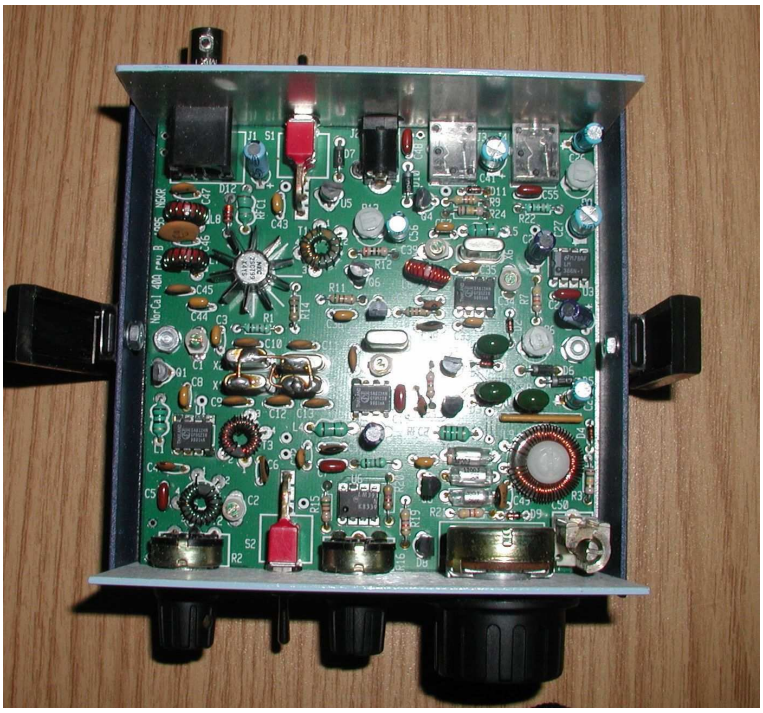

Foto 6

3 Circuit Diagram of NorCal 40A

taken from inside cover of [2] by permission ?

nc40a1.eps

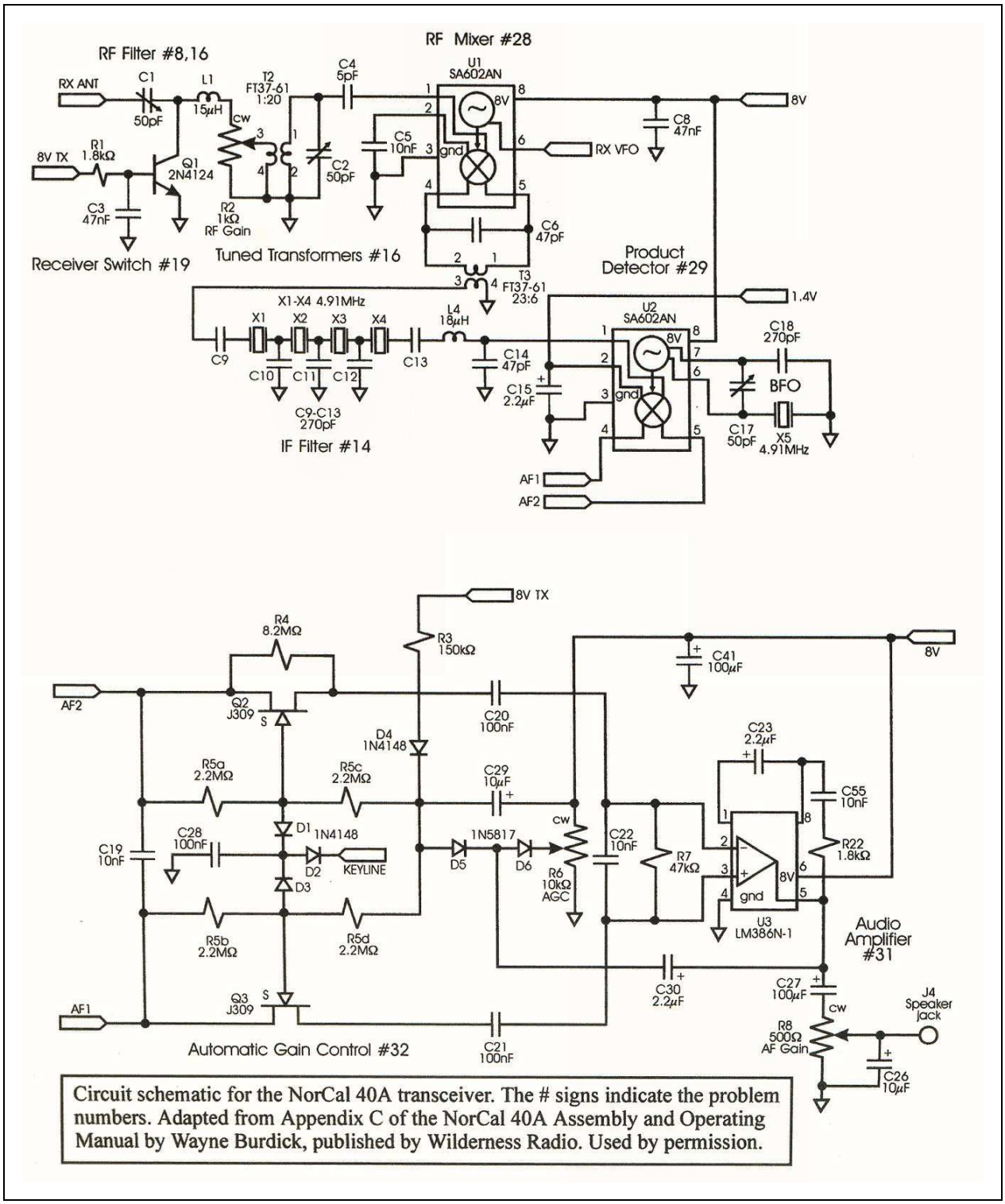

Circuit schematic for the NorCal 40A transceiver. The # signs indicate the problem numbers. Adapted from Appendix C of the NorCal 40A Assembly and Operating Manual by Wayne Burdick, published by Wilderness Radio. Used by permission.

nc40a2.eps

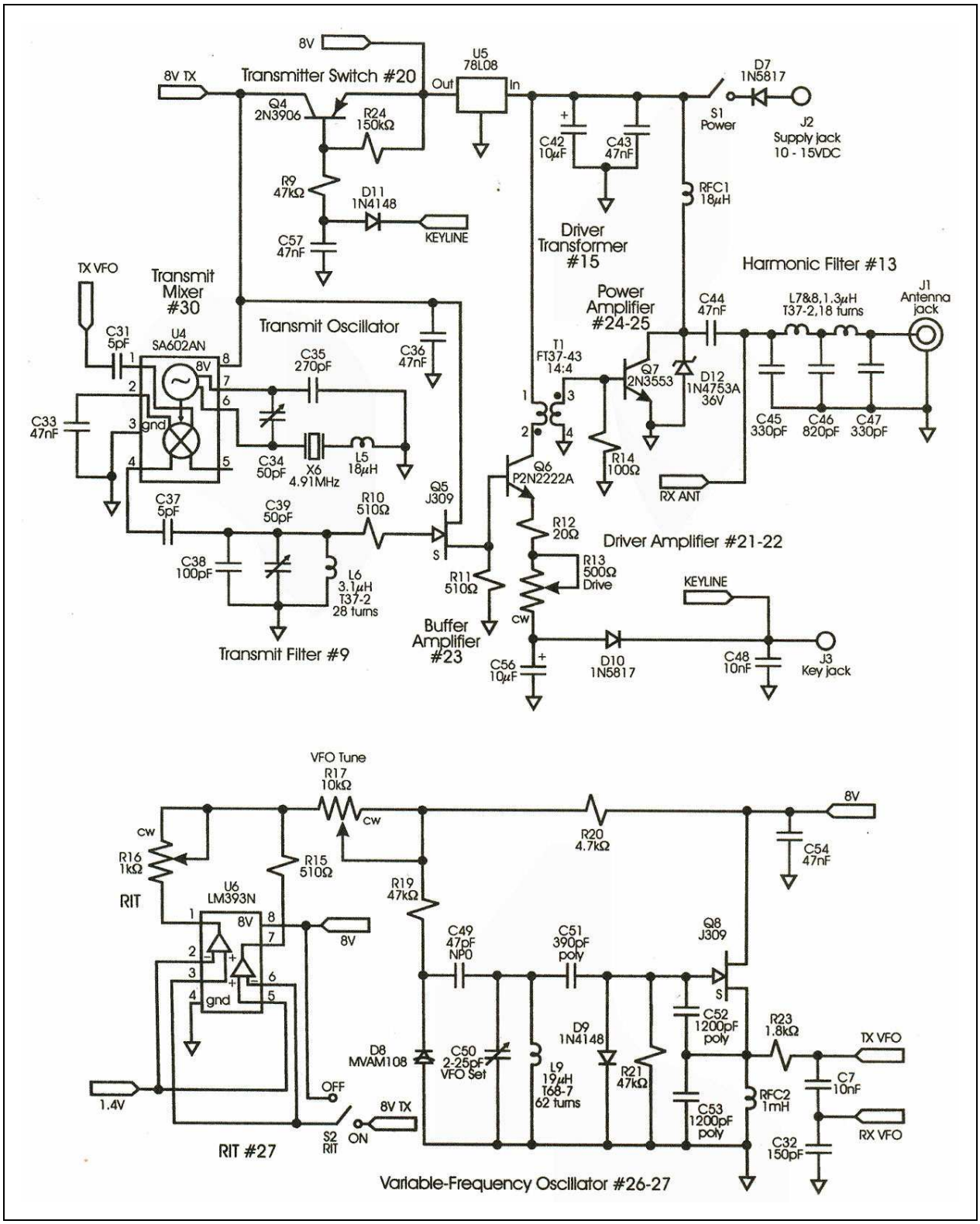
8V
8V TX
Transmitter Switch #20
Q4
2N3906
R24
150kΩ
U5
78L08
Out
In
D7
1N5817
S1
Power
J2
Supply jack
10 - 15VDC
C42
10µF
C43
47nF
R9
47kΩ
D11
1N4148
KEYLINE
C57
47nF
RFC1
18µH
Driver
Transformer
#15
Harmonic Filter #13
TX VFO
Transmit
Mixer
#30
Power
Amplifier
#24-25
C44
47nF
L7&8,1.3µH
T37-2,18 turns
J1
Antenna
jack
C31
5pF
U4
SA602AN
Transmit Oscillator
C36
47nF
C35
270pF
T1
FT37-43
14:4
Q7
2N3553
D12
1N4753A
36V
C33
47nF
gnd
C34
50pF
X6
4.91MHz
L5
18µH
C45
330pF
C46
820pF
C47
330pF
R14
100Ω
Q6
P2N2222A
RX ANT
C37
5pF
C39
50pF
R10
510Ω
Q5
J309
R12
20Ω
Driver Amplifier #21-22
C38
100pF
L6
3.1µH
T37-2
28 turns
R11
510Ω
R13
500Ω
Drive
KEYLINE
Buffer
Amplifier
#23
cw
Transmit Filter #9
C56
10µF
D10
1N5817
C48
10nF
J3
Key jack
VFO Tune
R17
10kΩ
cw
R20
4.7kΩ
8V
C54
47nF
R16
1kΩ
RIT
R15
510Ω
R19
47kΩ
U6
LM393N
C49
47pF
NP0
C51
390pF
poly
Q8
J309
D9
1N4148
C52
1200pF
poly
R23
1.8kΩ
TX VFO
D8
MVAM108
C50
2-25pF
VFO Set
L9
19µH
T68-7
62 turns
R21
47kΩ
C7
10nF
1.4V
OFF
8V TX
C53
1200pF
poly
RFC2
1mH
RX VFO
S2
RIT
ON
C32
150pF
RIT #27
Variable-Frequency Oscillator #26-27

4 Block Diagram of TRX7A (NorCal 40A)

general introduction to simulation

programs used: PSpice V8, WinSpice, Eagle, LaTex

links

sorting of project data files into subdirectories

5 Preselector Bandpass Filter A (PRESELA)

The receive signal from **Antenna jack J1** is lowpass-filtered by the **Harmonic Filter** (f_c = 10 MHz). Its output signal goes to point **RX ANT** which is the input of block **RF Filter** (see block diagram on page xxx). The circuit of this block is called **Preselector Bandpass Filter A** (PRESELA) here. This simple circuit provides several important functions for the NorCal 40A receiver.

Circuit elements `C1`, `L1`, `T2`, `C2` and `C4` provide a quite sharp bandpass characteristic which can be adjusted by capacitive trimmers `C1` and `C2` for maximum sensitivity in the receive band 7.000 to 7.040 MHz. Transformer `T2` provides an important voltage step-up to lift the very small input signals above the input noise voltage of mixer-IC `U1`.

When the NorCal 40A is switched into transmit mode, point **8V TX** goes to a DC voltage of +8 V and turns on `Q1`. The collector of `Q1` goes down to a DC saturation voltage of about xx V and effectively puts the node between `C1` and `L1` (the input resonator) close to ground potential. Therefore in TX mode, part of `C1` is put in parallel to `C45` in the **Harmonic Filter**.

Potentiometer `R2` provides a very wide (about xx dB) control for receiver sensitivity and also overload protection against very strong input signals. When the wiper of `R2` is in the clockwise position, the input winding of `T2` (consisting of only one turn) is unaffected by the `R2` resistance of 1 kΩ and lies in series to input resonator `C1, L1`. `T2` transforms the receive signal up by its turns ratio 1:20.

5.1 Simulation

preselav2.eps

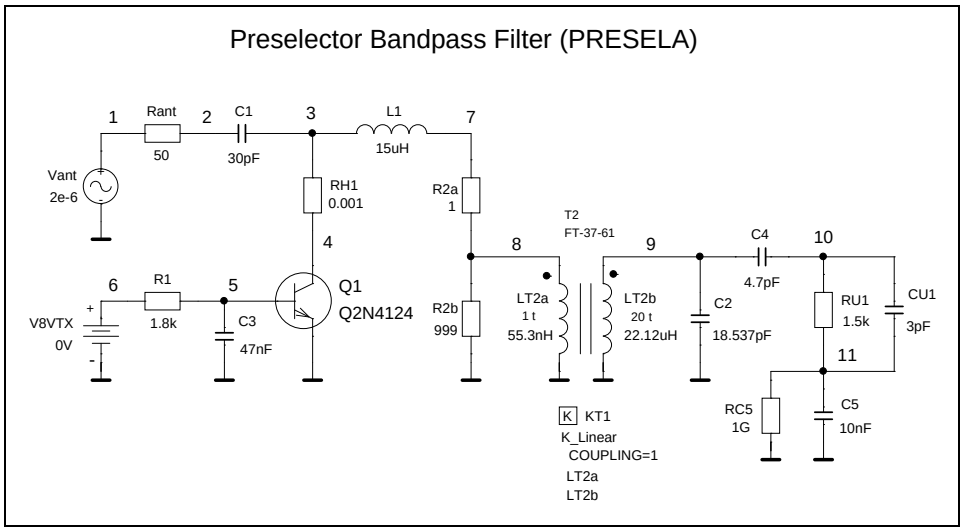

preselav2o.eps

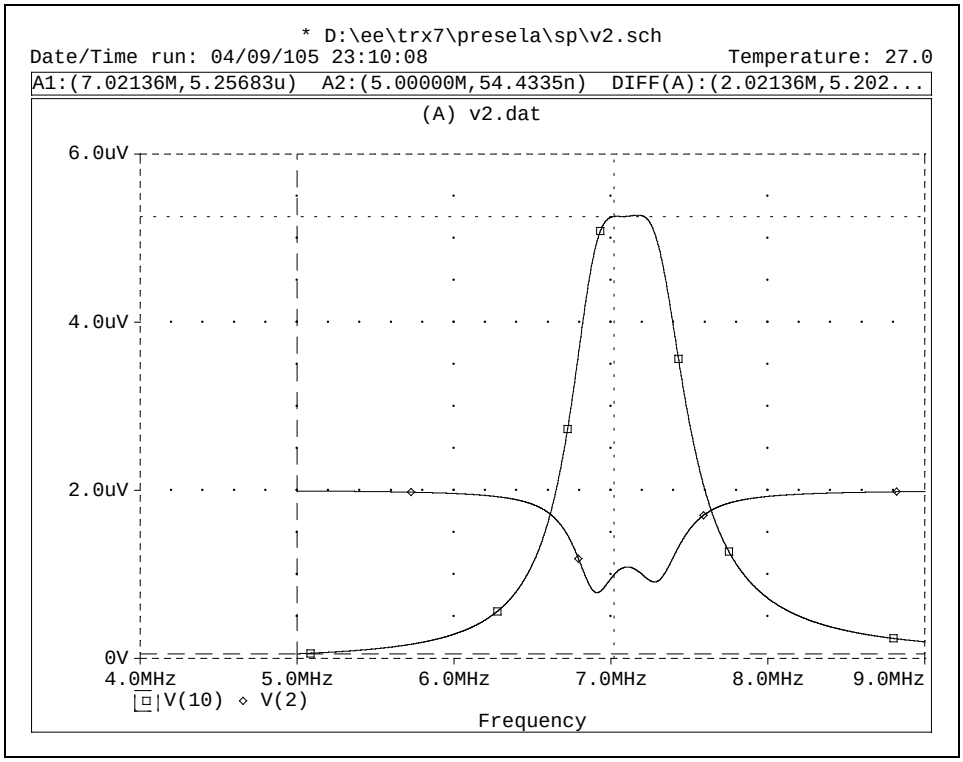

5.2 Test circuit

preselatc.eps

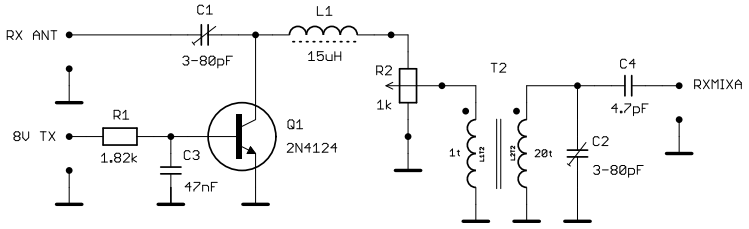

C1,C2 Foil Trimmer Capacitor, 3 to 80pF

C3 Ceramic Capacitor CK05 BX 473K, 0.047uF/50V, Bue'06/'07, p.263, 53 D 657

C4 Ceramic Capacitor EDPU, 4.7pF/100V, Bue'06/'07, p.265, 59 D 158

L1 RF Choke Fastron SMCC, 15uH, 610mA, 0.60 Ohm, Q=50 @ 2.52 MHz, Bue'06/'07, p.289, 74 D 314

Q1 NPN Silicon Transistor 2N4124, Bue'06/'07, p.76, 27 S 6600

R1 Metal Film Resistor, 1K82, 0.6W, +-1%, Bue'06/'07, p.344, 30 E 317

R2 Potentiometer, linear, Piher PC 16 hl P6, 1K0, Bue'06/'07, p.395, 68 E 306

T2 primary winding 1turn, secondary winding 20turns, 0.5mm CuL on
Ferrite Toroid Core Fair-Rite Part No. 5961000201 (AMIDON FT-37-61)

preselatcb.eps

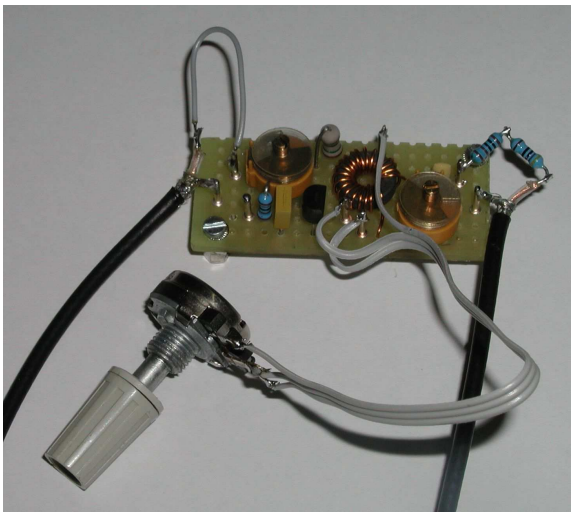

board size: 47 mm x 21 mm

Preselector Bandpass Filter (PRESELA), Test Circuit	
TITLE: preselatc	
Document Number: preselatc.sch	REV: A
Date: 08.12.2005 17:24:54	Sheet: 1/1

Meßergebnis PC-I-HM8028

6 Receiver Mixer A (RXMIXA)

Text ...

6.1 Simulation

6.1.1 Modeling of SA612AN

6.1.2 Mixer simulation

net lists

waveforms

spectrum

6.2 Test circuit

rxmixatc.eps

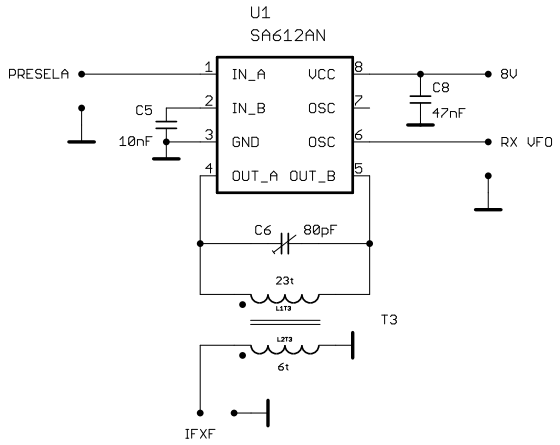

C5 Ceramic Capacitor CK05 BX 103K, 0.01uF/100V, Bue'04/'05, p.274, 53 D 681

C6 Foil Trimmer Capacitor, 3 to 80pF

C8 Ceramic Capacitor CK05 BX 473K, 0.047uF/50V, Bue'04/'05, p.274, 53 D 657

T3 primary winding 23turns, secondary winding 6turns, 0.35mm CuL on
Ferrite Toroid Core Fair-Rite Part No. 5961000201 (AMIDON FT-37-61)

U1 IC SA612AN or NE612AN, PDIP8, Bue'04/'05, p.88, 41 S 7932

rxmixatcb.eps

board size: 47 mm x 22 mm

Receiver Mixer A (RXMIXA), Test Circuit	
TITLE: RXMIXATC	
Document Number: rxmixatc.sch	REV: A
Date: 17.05.2005 13:05:10	Sheet: 1/1

Meßergebnis PC-I-HM8028

7 IF Crystal Filter (IFXF)

Text ...

Hinweis EMRFD

7.1 Simulation

7.1.1 Crystal Modeling

qumod1.eps

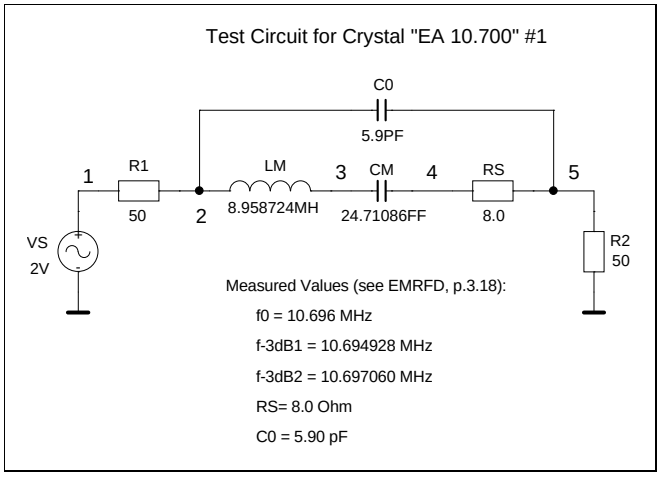

qumod1o.eps

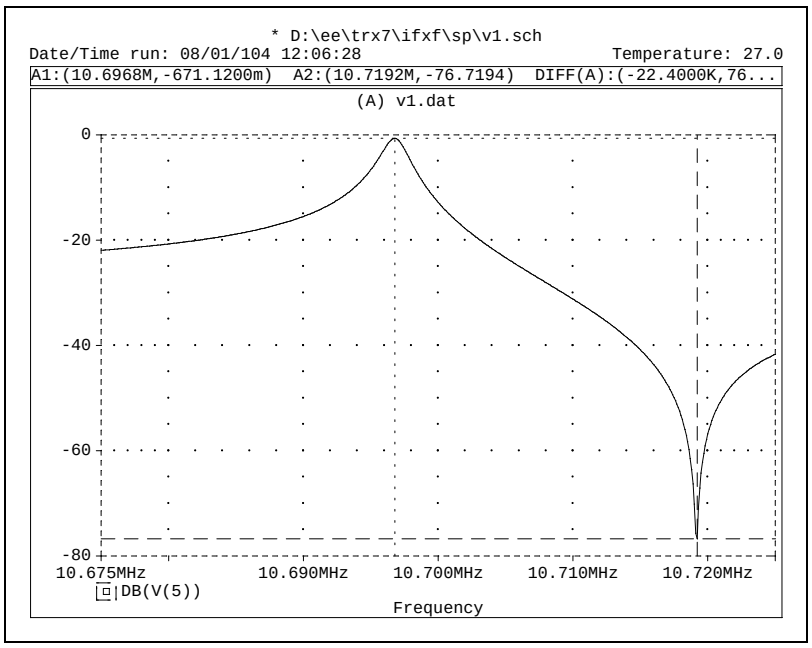

7.2 Test circuit

8 Product Detector (PRODDET)

text ...

see problem no. ? in EoR

8.1 Simulation

8.2 Test circuit

9 Automatic Gain Control (AGC)

text ...

see problem no. ? in EoR

9.1 Simulation

9.2 Test circuit

10 Audio Amplifier (AFAMP)

text ...

see problem no. ? in EoR

10.1 Simulation

10.1.1 Modeling of LM386

lm386.eps

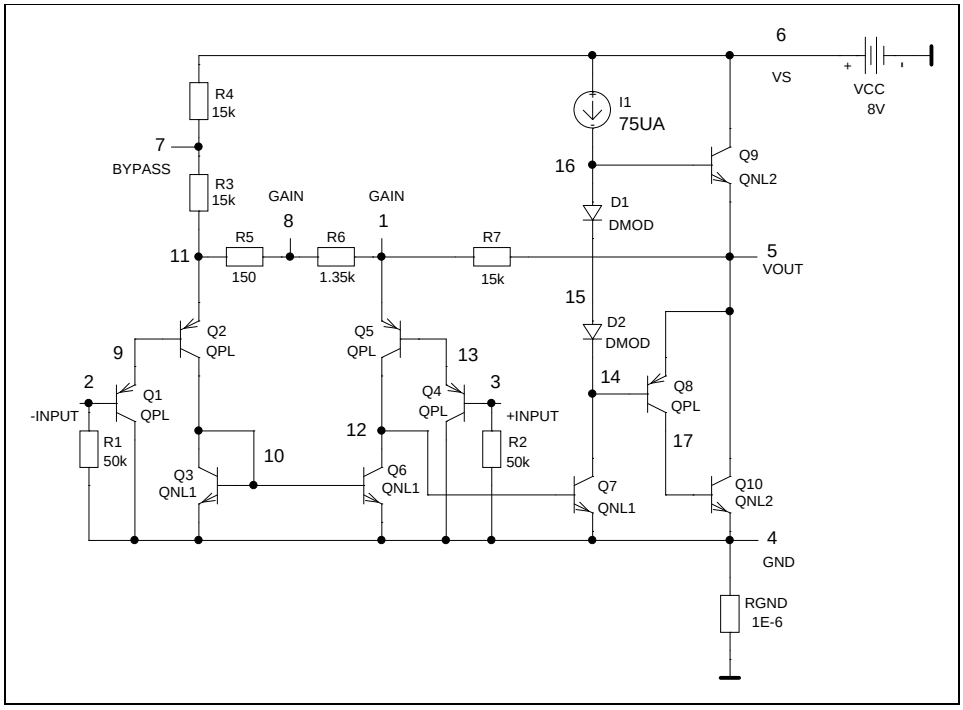

d:/ee/trx7/afamp/sp/v2.lib

```
* Semiconductor Model Parameters of Device Level Model for LM386
*
* HG 30-JUL-04
*
* Model DMOD for Diodes D1, D2:
*
* Reasonable values for parameters IS, RS, N and CJO were assumed.
*
.MODEL DMOD D IS=0.1E-12A RS=1OHM N=1.5 CJO=1PF
*
* Model QPL for BJTs Q1, Q2, Q4, Q5, Q8:
*
.MODEL QPL PNP IS=57E-18A BF=20 VAF=50V IKF=0.02A RB=50OHM RC=18OHM
+ CJE=7PF TF=16NS CJC=2.2PF
*
* Model QNL1 for BJTs Q3, Q6, Q7:
*
.MODEL QNL1 NPN IS=57E-18A BF=80 VAF=100V IKF=0.02A RB=50OHM RC=18OHM
+ CJE=7PF TF=1.6NS CJC=2.2PF
*
*
* Model QNL2 for output BJTs Q9, Q10:
*
* Parameters IS,IKF and RC were calculated from IMAX=sqrt(2*Pout/Rout)=285mA
* with Pout=325mW and Rout=8 Ohm using the following equations from the book
* "Simulating with SPICE" (intusoft, 1988), p.3-13:
*
```

```
*  IS=2E-15*IMAX=570E-18A, IKF=0.7*IMAX=0.200A, RC=0.5/IMAX=1.8 Ohm
*
* Assuming FT=100MHz, COB=1PF, the following parameters were calculated:
*  CJE=7*COB=7pF, TF=0.16/FT=1.6NS, CJC=2.2*COB=2.2pF
*
* Reasonable values for parameters BF, VAF and RB were assumed.
*
.MODEL QNL2 NPN IS=570E-18A BF=80 VAF=100V IKF=0.2A RB=25OHM RC=1.8OHM
+ CJE=7PF TF=1.6NS CJC=2.2PF


                                                                        lm386.out
**** 08/02/104 14:37:25 ******** NT Evaluation PSpice (July 1997) ************

 * D:\ee\trx7\afamp\sp\V2.SCH

 ****     SMALL SIGNAL BIAS SOLUTION       TEMPERATURE =   27.000 DEG C

*******************************************************************************

 NODE   VOLTAGE     NODE   VOLTAGE     NODE   VOLTAGE     NODE   VOLTAGE

(    1)    1.4413  (    2)     .0249  (    3)     .0243  (    4) 4.769E-09

(    5)    4.6021  (    6)    8.0000  (    7)    4.7216  (    8)    1.4431

(    9)     .6945  (   10)     .7477  (   11)    1.4433  (   12)     .6890

(   13)     .6932  (   14)    3.8910  (   15)    4.6312  (   16)    5.3713

(   17)     .7676

    VOLTAGE SOURCE CURRENTS
    NAME         CURRENT

    V_VCC       -4.769E-03

    TOTAL POWER DISSIPATION   3.82E-02  WATTS
```

```
**** 08/02/104 14:37:25 ******** NT Evaluation PSpice (July 1997) ************

 * D:\ee\trx7\afamp\sp\V2.SCH

 ****     OPERATING POINT INFORMATION      TEMPERATURE =   27.000 DEG C

******************************************************************************

**** DIODES

NAME          D_D1         D_D2
MODEL         DMOD         DMOD
ID            1.93E-05     1.93E-05
VD            7.40E-01     7.40E-01
REQ           2.01E+03     2.01E+03
CAP           1.75E-12     1.75E-12


**** BIPOLAR JUNCTION TRANSISTORS

NAME          Q_Q7         Q_Q1         Q_Q6         Q_Q10        Q_Q9
MODEL         QNL1         QPL          QNL1         QNL2         QNL2
IB            2.64E-07    -4.98E-07     2.55E-06     5.24E-05     5.57E-05
IC            2.18E-05    -9.96E-06     2.02E-04     4.27E-03     4.48E-03
VBE           6.89E-01    -6.70E-01     7.48E-01     7.68E-01     7.69E-01
VBC          -3.20E+00     2.49E-02     5.87E-02    -3.83E+00    -2.63E+00
VCE           3.89E+00    -6.94E-01     6.89E-01     4.60E+00     3.40E+00
BETADC        8.25E+01     2.00E+01     7.92E+01     8.14E+01     8.03E+01
GM            8.40E-04     3.85E-04     7.71E-03     1.62E-01     1.69E-01
RPI           9.80E+04     5.19E+04     1.02E+04     4.93E+02     4.64E+02
RX            5.00E+01     5.00E+01     5.00E+01     2.50E+01     2.50E+01
RO            4.74E+06     5.02E+06     4.96E+05     2.43E+04     2.29E+04
CBE           1.26E-11     1.72E-11     2.40E-11     2.71E-10     2.83E-10
CBC           1.27E-12     2.18E-12     2.26E-12     1.21E-12     1.34E-12
CJS           0.00E+00     0.00E+00     0.00E+00     0.00E+00     0.00E+00
BETAAC        8.24E+01     2.00E+01     7.83E+01     7.98E+01     7.86E+01
CBX           0.00E+00     0.00E+00     0.00E+00     0.00E+00     0.00E+00
FT            9.66E+06     3.15E+06     4.67E+07     9.47E+07     9.48E+07

NAME          Q_Q5         Q_Q4         Q_Q2         Q_Q3         Q_Q8
MODEL         QPL          QPL          QPL          QNL1         QPL
IB           -1.02E-05    -4.85E-07    -1.05E-05     2.55E-06    -2.47E-06
IC           -2.02E-04    -9.71E-06    -2.07E-04     2.02E-04    -5.24E-05
VBE          -7.48E-01    -6.69E-01    -7.49E-01     7.48E-01    -7.11E-01
VBC           4.19E-03     2.43E-02    -5.33E-02     0.00E+00     3.12E+00
VCE          -7.52E-01    -6.93E-01    -6.96E-01     7.48E-01    -3.83E+00
BETADC        1.98E+01     2.00E+01     1.98E+01     7.92E+01     2.12E+01
GM            7.72E-03     3.75E-04     7.91E-03     7.72E-03     2.02E-03
RPI           2.54E+03     5.33E+04     2.47E+03     1.02E+04     1.05E+04
RX            5.00E+01     5.00E+01     5.00E+01     5.00E+01     5.00E+01
RO            2.48E+05     5.15E+06     2.42E+05     4.96E+05     1.01E+06
CBE           1.35E-10     1.71E-11     1.38E-10     2.40E-11     4.37E-11
CBC           2.20E-12     2.18E-12     2.26E-12     2.20E-12     1.28E-12
CJS           0.00E+00     0.00E+00     0.00E+00     0.00E+00     0.00E+00
BETAAC        1.96E+01     2.00E+01     1.96E+01     7.84E+01     2.11E+01
CBX           0.00E+00     0.00E+00     0.00E+00     0.00E+00     0.00E+00
FT            8.94E+06     3.10E+06     8.96E+06     4.68E+07     7.14E+06
```

tclm386.eps

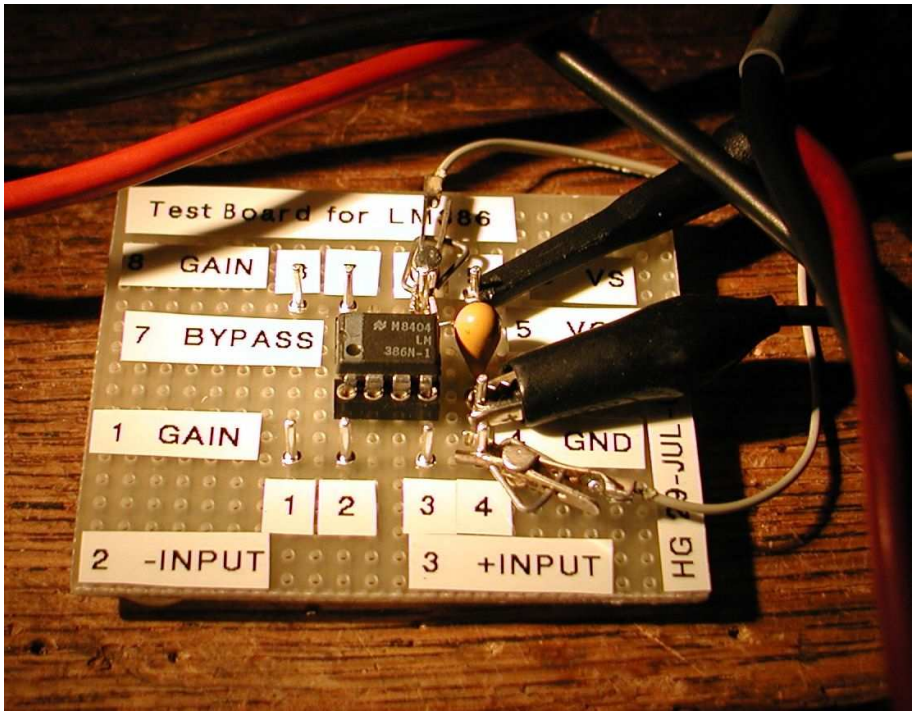

board size: 59 mm x 48 mm

node	name	simulated voltage	measured voltage
1	GAIN	1.441 V	-
2	-INPUT	24.9 mV	-
3	+INPUT	24.3 mV	-
5	VOUT	4.602 V	-
6	VS	8.000 V	-
7	BYPASS	4.722 V	-
8	GAIN	1.443 V	-

10.2 Test circuit

11 Variable Frequency Oscillator (VFO)

Text ...

11.1 Simulation

11.2 Test circuit

12 Transmitter Switch (TXSW)

12.1 Simulation

Key closed

txsw1.eps

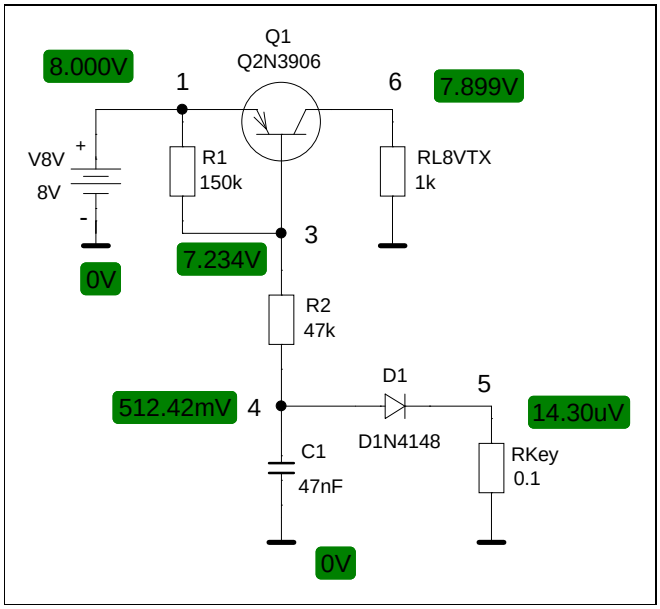

Key open

txsw2.eps

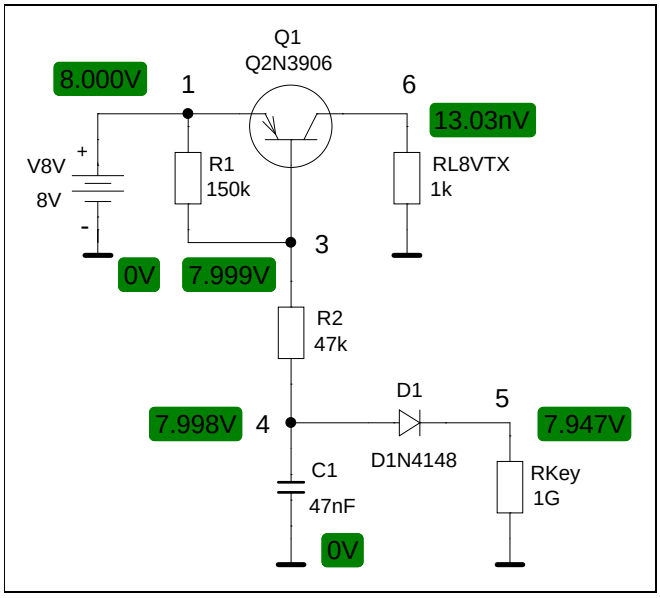

12.2 Test circuit

txswtc.eps

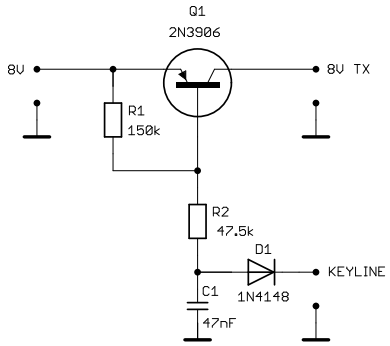

C1 Ceramic Capacitor CK05 BX 473K, 0.047uF/50V, Bue'04/'05, p.274, 53 D 657

D1 High-Speed Diode, 1N4148, Bue'04/'05, p.74, 26 S 8150

Q1 General Purpose Transistor, PNP Silicon, 2N3906, Bue'04/'05, p.75, 27 S 5300

R1 Metal Film Resistor, 150K, 0.6W, +-1%, Bue'04/'05, p.361, 30 E 502

R2 Metal Film Resistor, 47K5, 0.6W, +-1%, Bue'04/'05, p.361, 30 E 454

txswtcb.eps

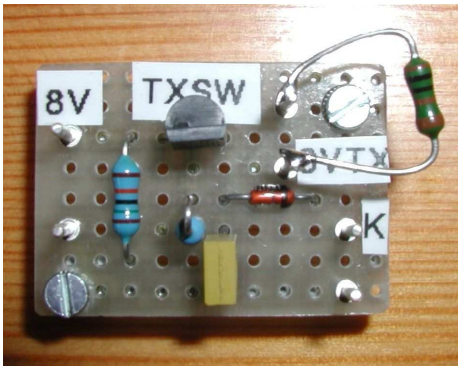

board size: 30.5 mm x 21.5 mm

Transmitter Switch (TXSW), Test Circuit	
TITLE: txswtc	
Document Number: txswtc.sch	REV: A
Date: 25.08.2004 10:52:28	Sheet: 1/1

13 Transmit Mixer (TXMIX)

Text ...

13.1 Simulation

13.2 Test circuit

14 Driver (DR)

Text ...

14.1 Simulation

zener diode D12 (1N4753A) from drain to ground omitted for simulation

dr.eps

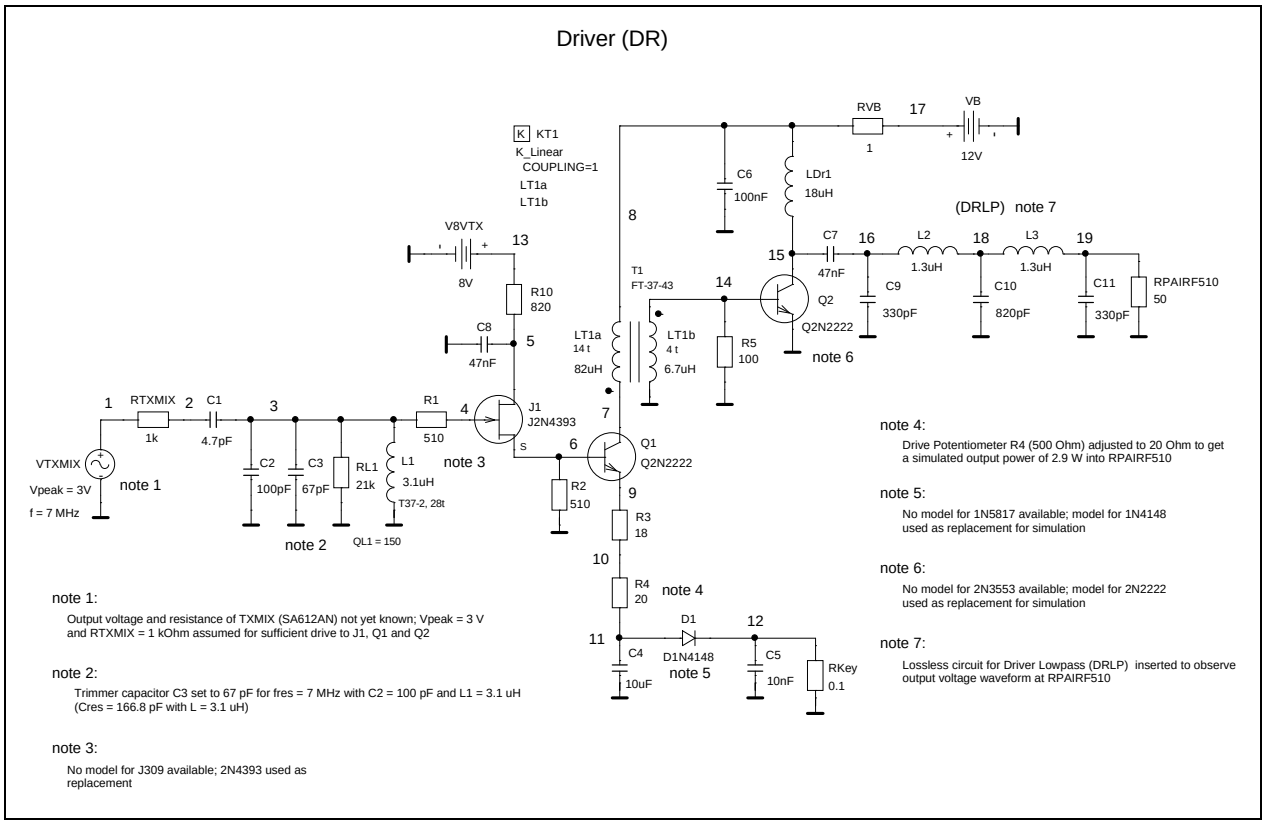

dro1.eps

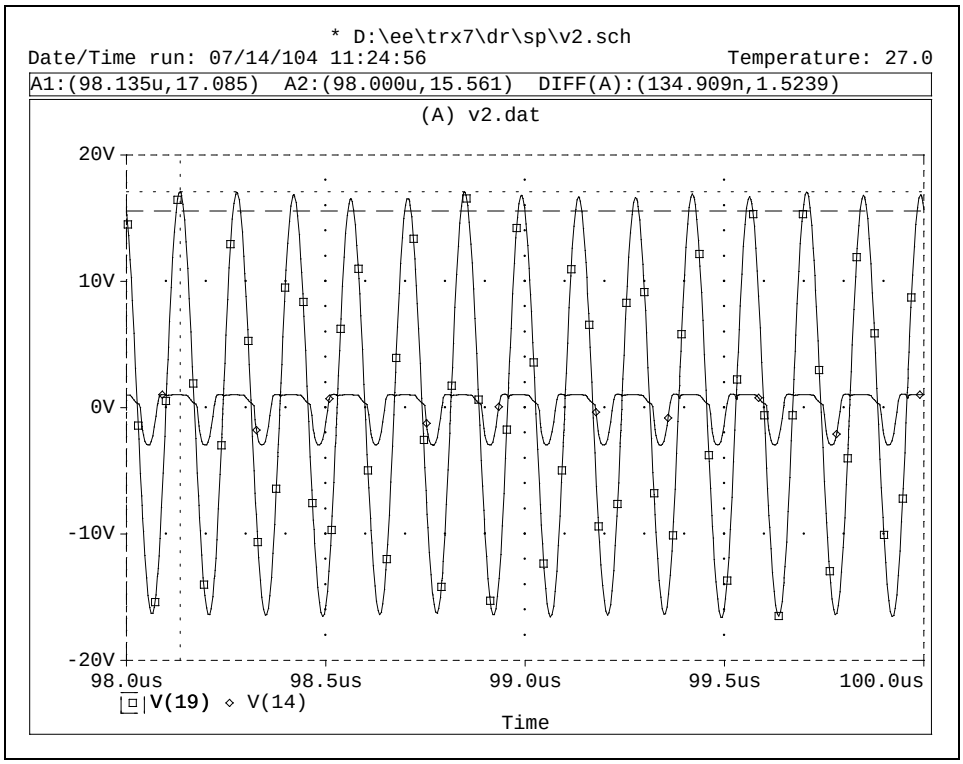

dro2.eps

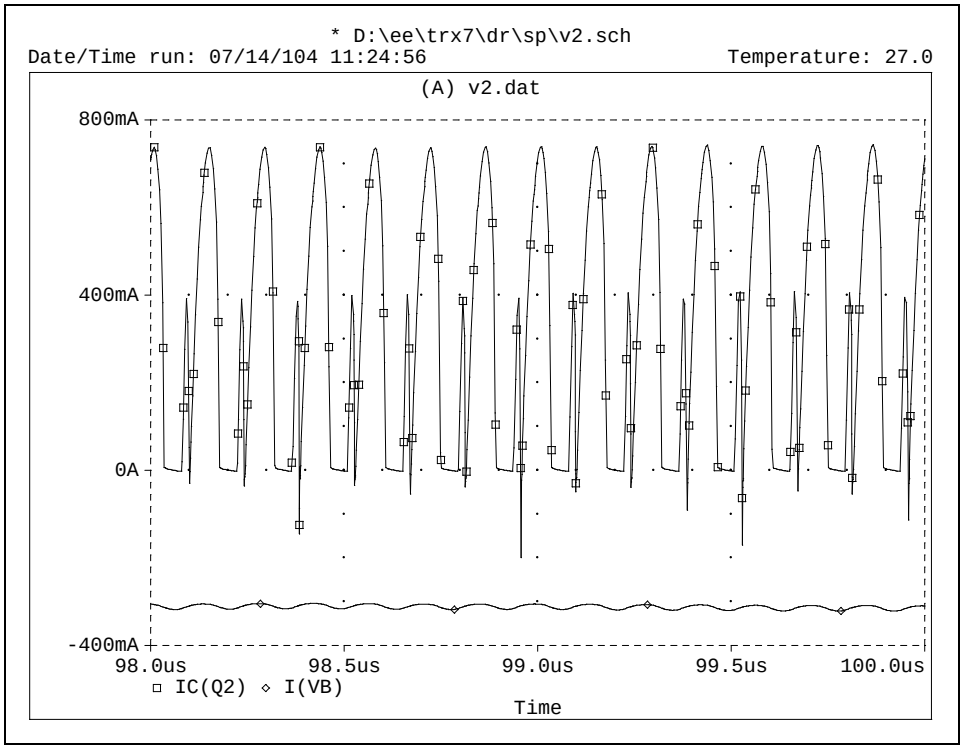

14.2 Test circuit

15 Driver Lowpass (DRLP)

Text ...

15.1 Simulation

drlp.eps

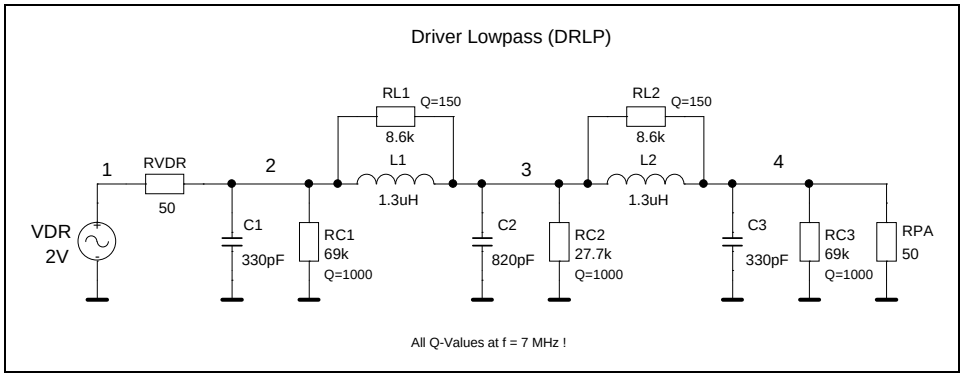

drlpo.eps

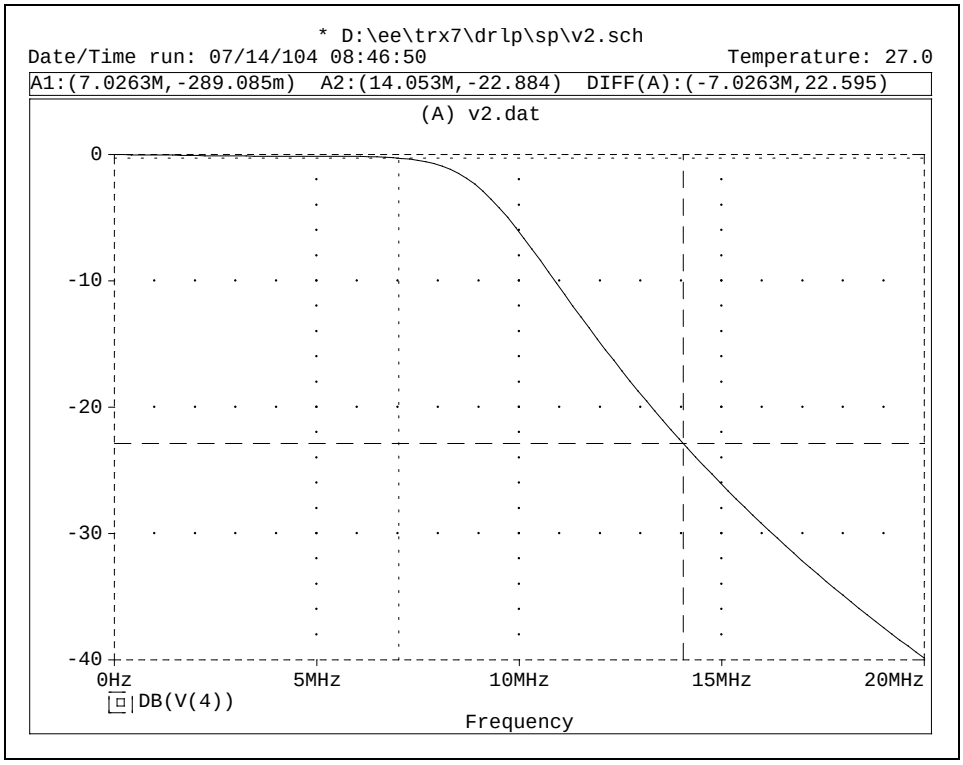

15.2 Test circuit

drlptc.eps

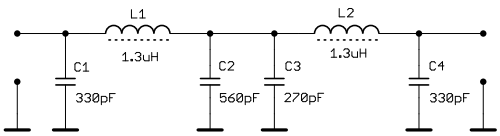

C1,C4 Ceramic Capacitor EDPU, 330pF, Bue'04/'05, p.276, 59 D 180

C2 Mica Capacitor, 560, +-5%, 300AE

C3 Ceramic Capacitor EDPU, 270pF, Bue'04/'05, p.276, 59 D 179

L1,L2 17.5 turns, 0.5mm CuL on Iron Powder Toroid Core MICROMETALS Part No. T37-2

drlptcb.eps

board size: 37 mm x 20.5 mm

Driver Lowpass (DRLP), Test Circuit	
TITLE: drlptc	
Document Number: drlptc.sch	REV: A
Date: 17.08.2004 11:12:18	Sheet: 1/1

16 Block Diagram of TRX7B

17 Preselector Bandpass Filter B (PRESELB)

Text ...

17.1 Design and simulation

The preselector bandpass filter was designed using the filter synthesis program S/FILSYN [5]. Design data and the synthesized circuit with element values are shown here:

```
                                                                                t4a.asc
*** S/FILSYN ***  FILTER PROGRAM

t4                                                                  16-JUL-04 07:03
   BAND-PASS FILTER
      EQUAL-RIPPLE PASS BAND
         BANDEDGE LOSS                            =   0.200000 DB.
         LOWER PASSBAND EDGE FREQUENCY            =   6.900000 MHz
         UPPER PASSBAND EDGE FREQUENCY            =   7.100000 MHz
      SPECIFIED STOPBAND TYPE
         PARAMETRIC BANDPASS
         MULTIPLICITY OF ZERO AT ZERO             =   3
         MULTIPLICITY OF ZERO AT INFINITY         =   1
         NUMBER OF FINITE TRANSMISSION ZEROS      =   1
         OVERALL FILTER DEGREE                    =   6

         TRANSMISSION ZEROS

               REAL PART        IMAGINARY PART

            0.0000000D+00       1.0700000D+07
         VALUE OF FREAL                           =   6.999286 MHz
         INPUT TERMINATION                        =   2.500000 kohm
         OUTPUT TERMINATION                       =   2.500000 kohm
         REQUESTED TERMINATION RATIO              =   1.0000000D+00

t4                                                                  16-JUL-04 07:03

   1   ....R....       50.000000  ohm
       .       .
   3   ....C....      424.950072 pF
       .       .
       .     ....
   4   .     L  C       7.301519 uH      RES.FREQUENCY
       .     ....      30.301178 pF       10.700000 MHz
       .       .
   5   ....C....       38.457589 pF
       .       .
   6   .       C        3.888401 pF
       .       .
   7   ....C....      163.800036 pF
       .       .
   9   ....L....        3.008359 uH
       .       .
  10   .       C        9.345921 pF
       .       .
  11   ....R....        2.500000 kohm
```

preselv1.eps

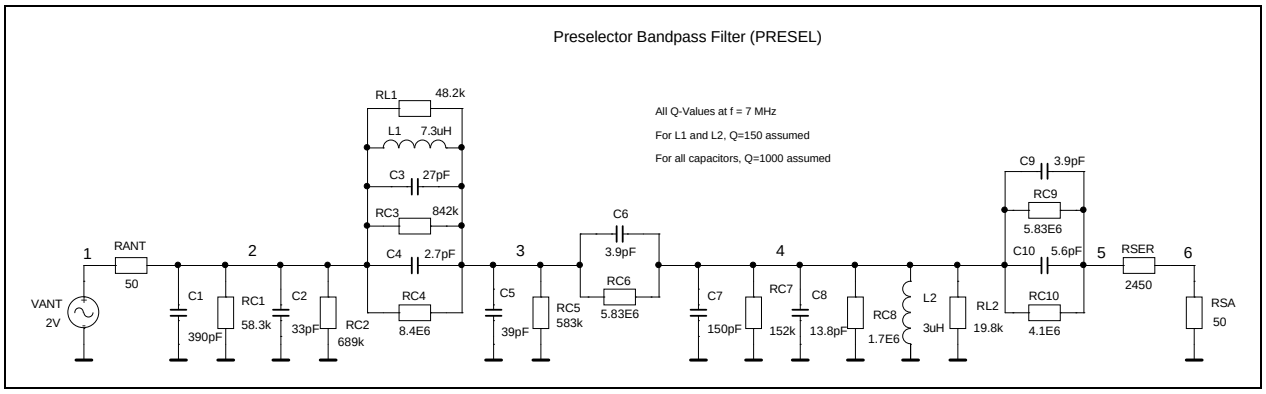

preselv1o.eps

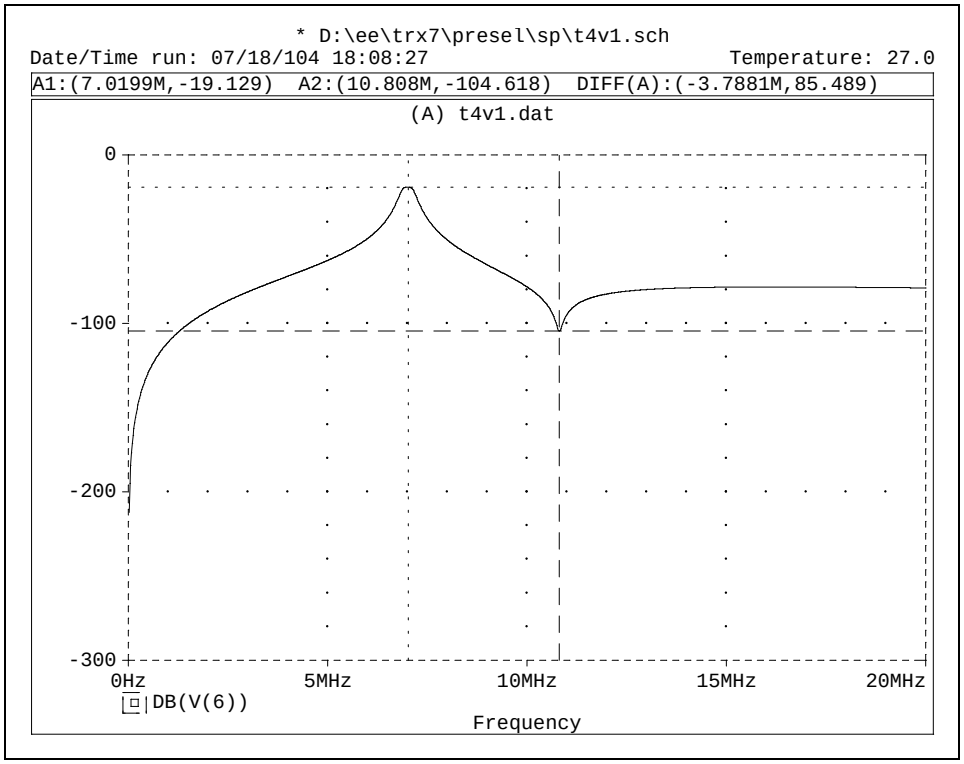

17.2 Test circuit

Schaltbild Eagle

presel1.eps

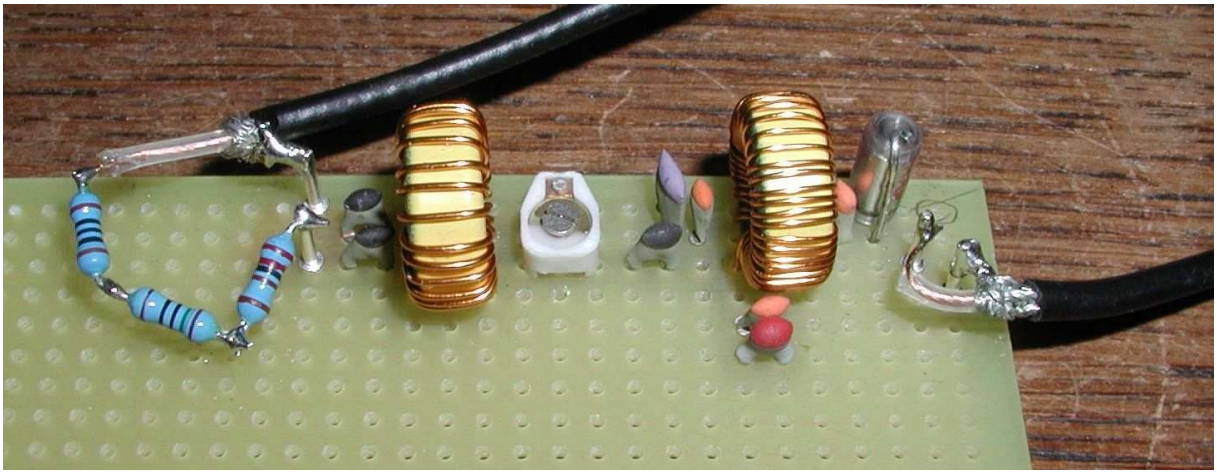

Meßkurve PC-I-HM8028

18 Receiver Mixer B (RXMIXB)

Text ...

18.1 Design and simulation

18.2 Test circuit

19 Power Amplifier (PAIRF510)

Text ...

[3], p.2.36, Fig 2.98 Simple HEXFET linear amplifier for QRP rigs

19.1 Simulation

pairf510.eps

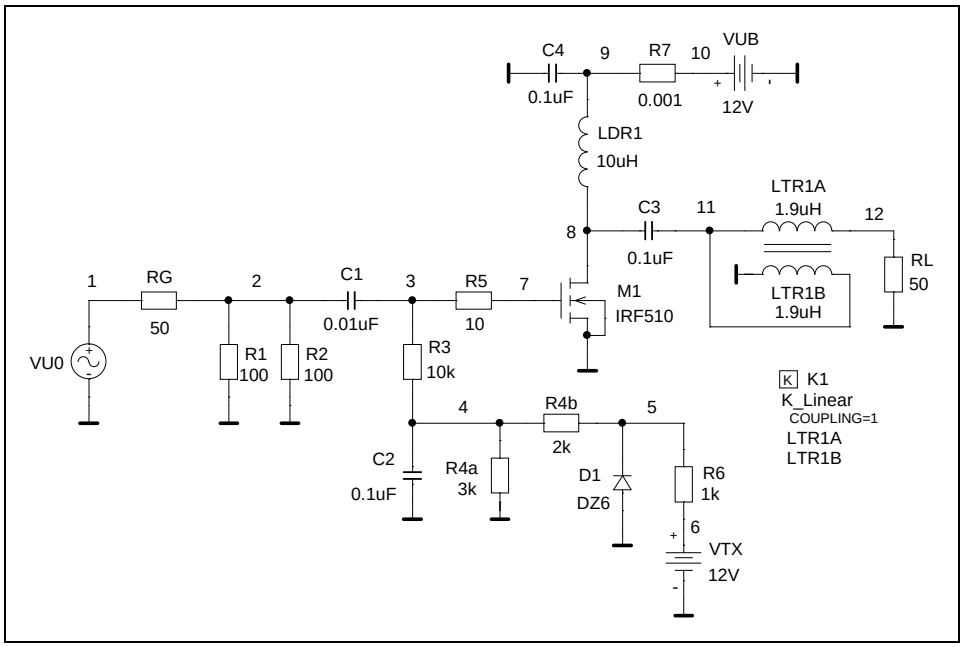

pairf510o1.eps

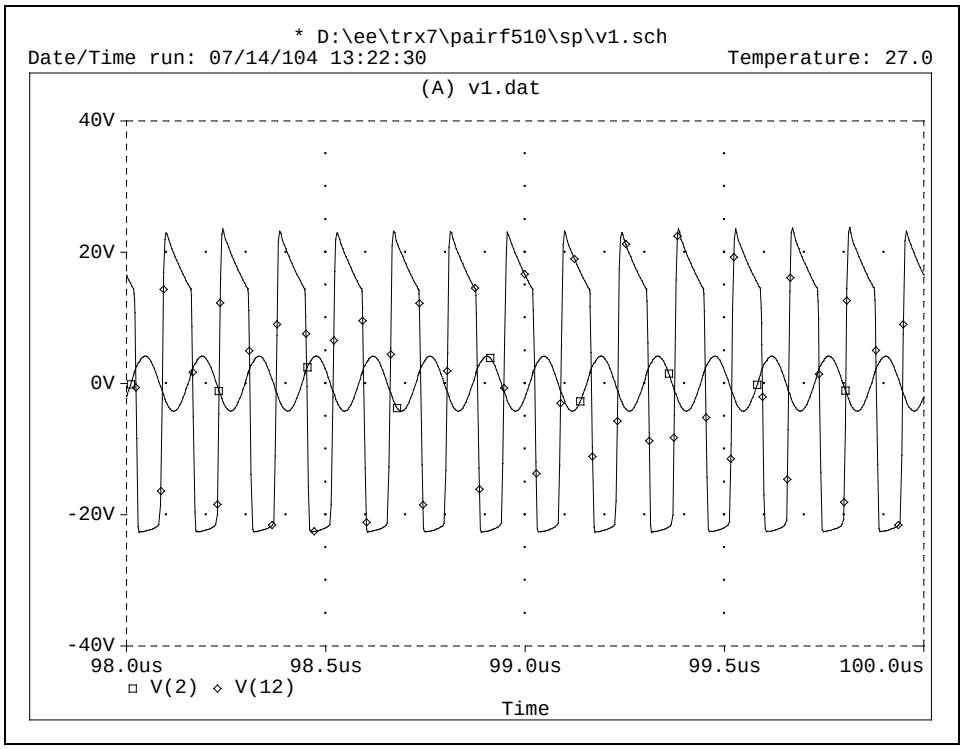

pairf510o2.eps

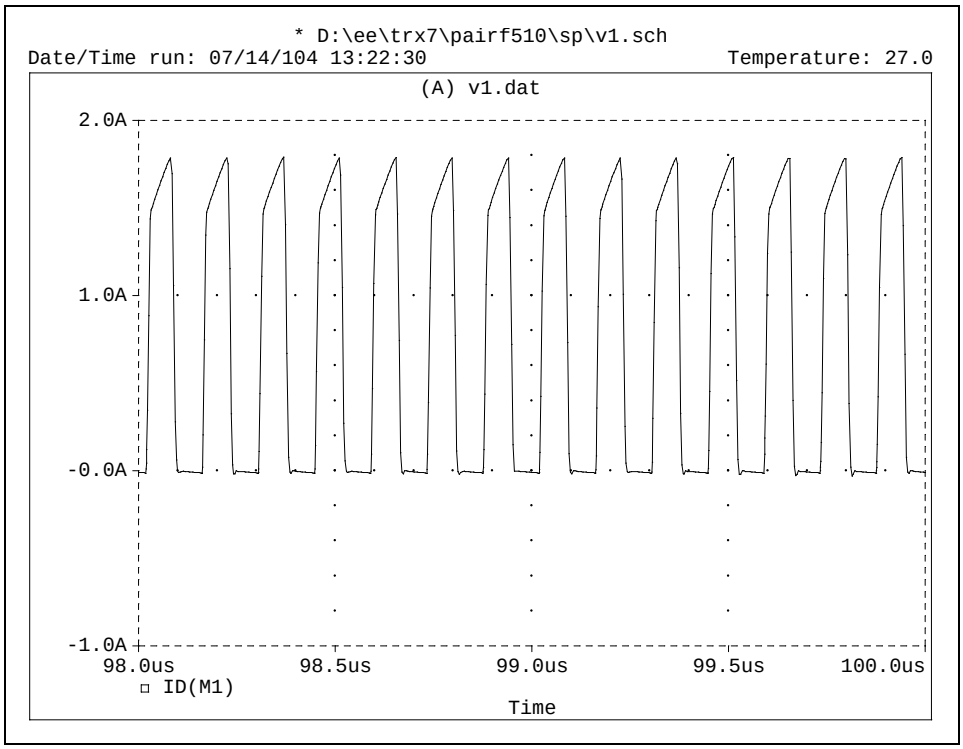

pairf510o3.eps

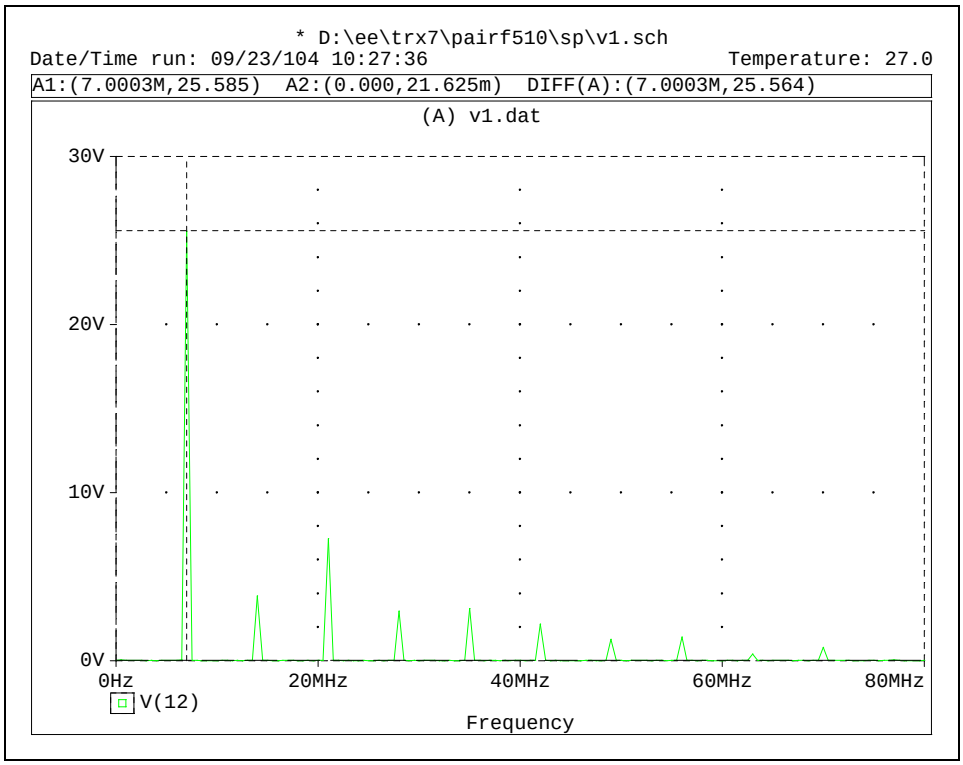

19.2 Test Circuit 1

Text ...

pairf510a.eps

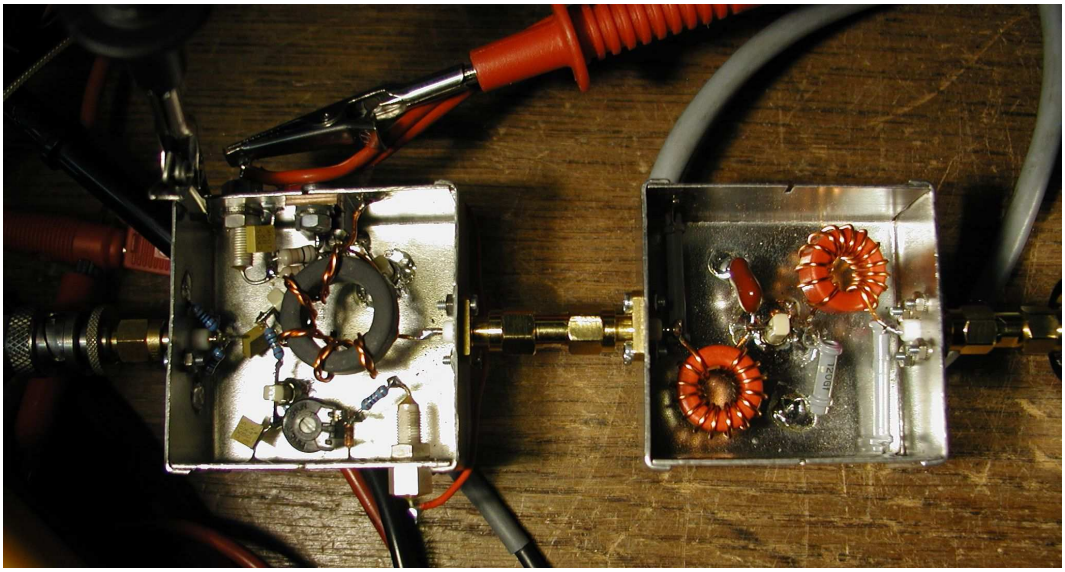

pairf510b.eps

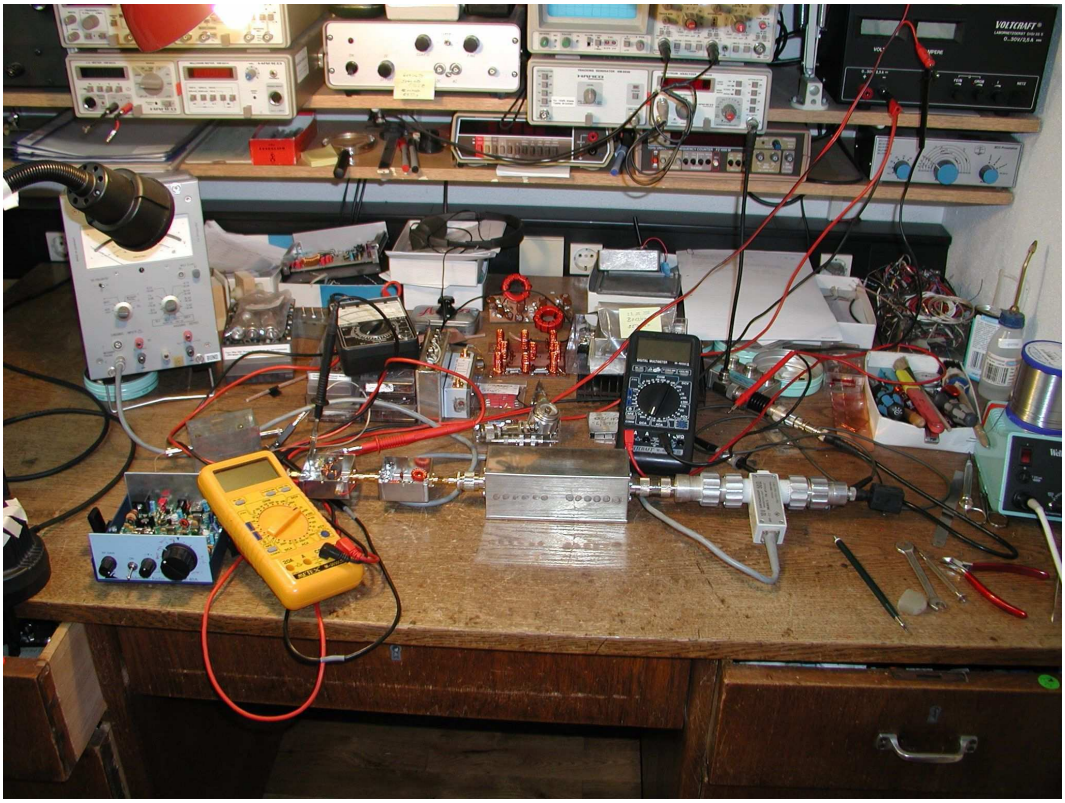

pepa1.eps

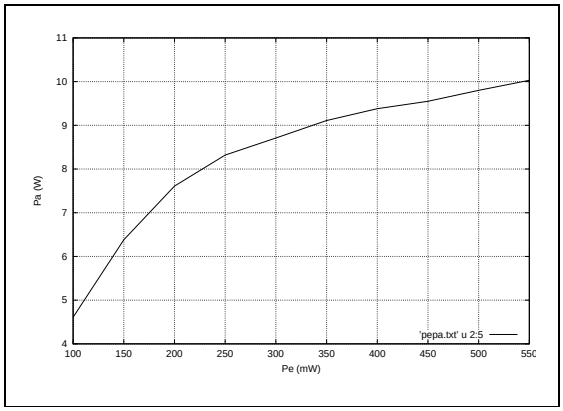

pepa2.eps

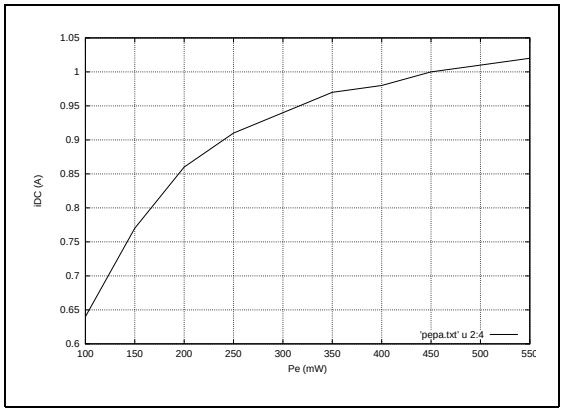

pepa3.eps

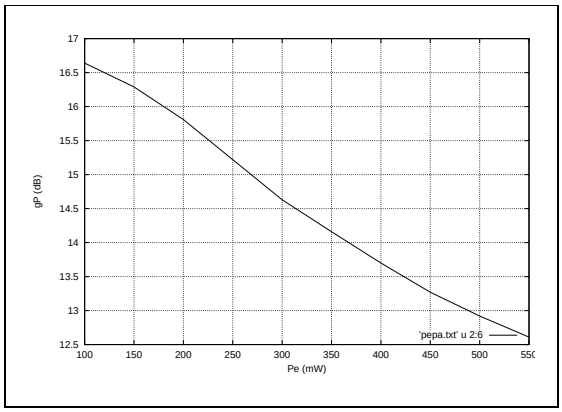

pepa4.eps

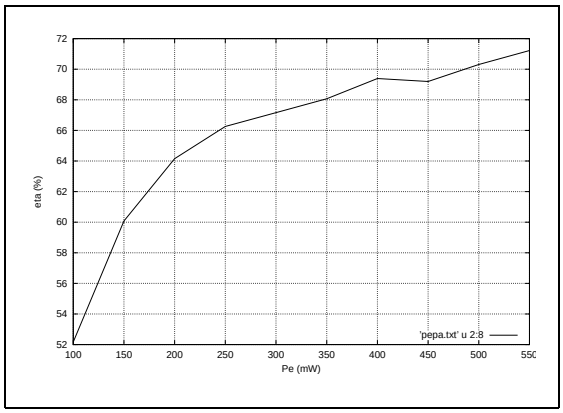

19.3 Test Circuit 2

pairf510tc2.eps

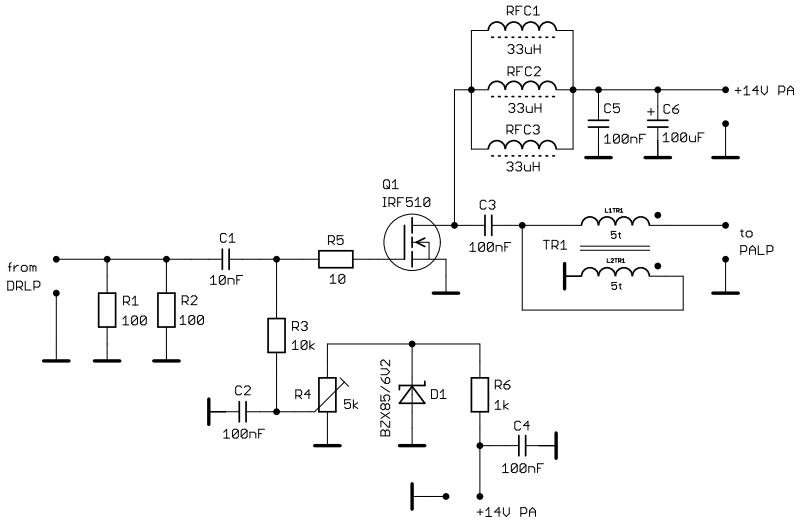

C1 Ceramic Capacitor CK05 BX 103K, 0.01uF/100V, Bue'04/'05, p.274, 53 D 681

C2,C3,C4,C5 Ceramic Capacitor CK05 BX 104K, 0.1uF/50V, Bue'04/'05, p.274, 53 D 661

C6 Electrolytic Capacitor 100uF/50V, Bue'04/'05, p.238, 12 D 1320

D1 Zener Diode, BZX85/6V2, Bue'04/'05, p.66, 22 S 9812

Q1 Power MOSFET IRF510, Bue'04/'05, p.67, 24 S 3240

R1,R2 Metal Film Resistor, 100R, 0.6W, +-1%, Bue'04/'05, p.359, 30 E 196

R3 Metal Film Resistor, 10K0, 0.6W, +-1%, Bue'04/'05, p.360, 30 E 389

R4 Potentiometer, PIHER 5K611, 5k0, linear, Bue'04/'05, p.405, 66 E 610

R5 Metal Film Resistor, 10R0, 0.6W, +-1%, Bue'04/'05, p.358, 30 E 100

R6 Metal Film Resistor, 1K00, 0.6W, +-1%, Bue'04/'05, p.360, 30 E 292

RFC1,RFC2,RFC3 RF Choke Fastron SMCC, 33uH, 500mA, 0.92 Ohm, Q=55 @ 2.52 MHz, Bue'04/'05, p.303, 74 D 318

TR1 2 x 5 turns (bifilar), 0.5mm CuL on Ferrite Toroid Core Fair-Rite Part No. 5961000301 (AMIDON FT-50-61)

pairf510tc2b.eps

Foto

board size: 74.5 mm x 21.5 mm

Power Amplifier (PAIRF510), Test Circuit 2	
TITLE: pairf510tc2	
Document Number: pairf510tc2.sch	REV: A
Date: 25.08.2004 09:59:44	Sheet: 1/1

20 Power Amplifier Lowpass (PALP)

20.1 Design and simulation

Text ...

design with S/FILSYN [5]

palp.eps

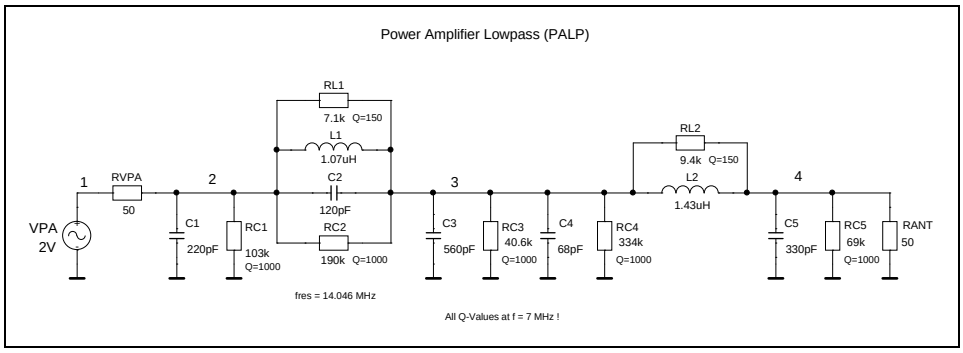

palpo.eps

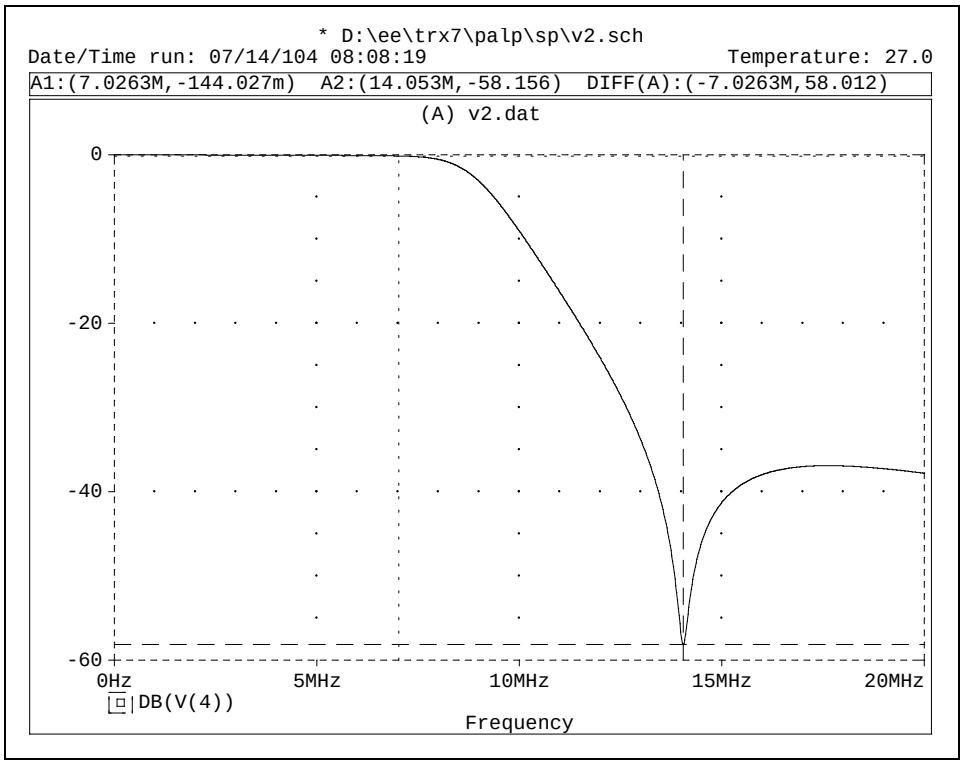

20.2 Test circuit

palptc.eps

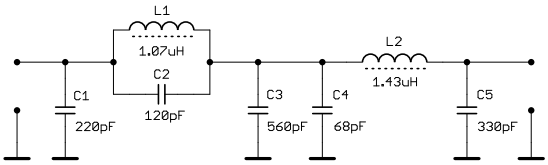

C1 Ceramic Capacitor EDPU, 220pF, Bue'04/'05, p.276, 59 D 178

C2 Ceramic Capacitor EDPU, 120pF, Bue'04/'05, p.276, 59 D 175

C3 Mica Capacitor, 560, +-5%, 300AE

C4 Mica Capacitor, 680J0, CM4FD

C5 Ceramic Capacitor EDPU, 330pF, Bue'04/'05, p.276, 59 D 180

L1 14 turns, 0.5mm CuL on Iron Powder Toroid Core MICROMETALS Part No. T50-2

L2 17 turns, 0.5mm CuL on Iron Powder Toroid Core MICROMETALS Part No. T50-2

palptcb.eps

board size: 41 mm x 21 mm

Power Amplifier Lowpass (PALP), Test Circuit	
TITLE: palptc	
Document Number: palptc.sch	REV: A
Date: 18.08.2004 09:33:40	Sheet: 1/1

Meßkurve PC-I-HM8028

21 Frequency Counter (FREQCTR)

22 CMOS Super Keyer 3 (CMOSKEYR)

23 Battery Pack (BATTPACK)

NiMH AA cells Panasonic P6P

price

link to datasheet

nominal supply voltage 14 V:

12 x 1.2 V = 14.4 V

14.4 V - 0.4 V (Schottky Diode) = 14 V

24 Summary

Zusammenfassender Text

25 Glossary

CW

QRP

PA

References

[1] Wayne Burdick, N6KR,
”NorCal 40A - Assembly and Operating Manual”,
Wilderness Radio, P.O. Box 3422, Joplin, MO 64803-3422, U.S.A.,
Telephone +1/417/782-1397
web: `www.fix.net/~jparker/wild.html`

[2] David B. Rutledge, KN6EK, California Institute of Technology,
”The Electronics of Radio”,
Cambridge University Press,
40 West 20th Street, New York, NY 10011-4211, U.S.A.,
ISBN 0 521 64136 5 hardback,
ISBN 0 521 64645 6 paperback
web: `www.cup.org`

[3] Wes Hayward, W7ZOI, Rick Campbell, KK7B, Bob Larkin, W7PUA,
”Experimental Methods in RF Design”, First Edition, 2003,
The American Radio Relay League, Newington, CT 06111, U.S.A.,
ISBN 0-87259-879-9,
ARRL Order No. 8799
web: `www.arrl.org`

[4] Jeff Russell, KC0Q, Bud Southard, N0II,
”The CMOS Super Keyer 3”,
QST, August 1995, p.26 - 28,
The American Radio Relay League, Newington, CT 06111, U.S.A.
web: `www.arrl.org`,
web: `www.idiompress.com/keyers.html`

[5] ”S/FILSYN User Manual”, Version 2.7, May 1, 1992,
DGS Associates, Inc., 1353 Sarita Way, Santa Clara, CA 95051, U.S.A.
web: `www.alkeng.com/sfilsyn.html`

[6] Paul Horowitz, Winfried Hill,
”The Art of Electronics”, Second Edition, 1989,
Cambridge University Press, Cambridge, United Kingdom,
ISBN 0-521-37095-7
web: `www.artofelectronics.com`

[7] Laurence W. Nagel,
”SPICE2: A Computer Program to Simulate Semiconductor Circuits”,
Memorandum No. ERL-M520, 9 May 1975,
Electronics Research Laboratory, College of Engineering,
University of California, Berkeley, CA 94720, U.S.A.
web: `www.eecs.berkeley.edu`

[8] T. Quarles, A. R. Newton, D. O. Pederson, A. Sangiovanni-Vincentelli,
”SPICE 3 Version 3F5 User’s Manual”, March, 1994,
Department of Electrical Engineering and Computer Sciences,
University of California, Berkeley, CA 94720, U.S.A.
web: `www.eecs.berkeley.edu`

[9] Donald O. Pederson (Univ. of California, Berkeley),
Kartikeya Mayaram (Texas Instruments),
”Analog Integrated Circuits for Communication”,
Principles, Simulation and Design, Second Printing, 1991,
Kluwer Academic Publishers Group, Distribution Centre, P.O.Box 322, The Netherlands
ISBN 0-7923-9089-X S. 136 - 138

[10] Andrei Vladimirescu,
”THE SPICE BOOK”,
John Wiley and Sons, Inc., New York, 1994
ISBN 0-471-60926-9

[11] User’s Guide ”Microsim Schematics”, Schematic Capture Software,
Version 8.0, June 1997

[12] Reference Manual ”Microsim PSpice A/D”, Version 8.0, June 1997

[13] Paul W. Tuinenga, MicroSim Corporation,
”SPICE, A Guide to Circuit Simulation and Analysis using PSpice”,
Second Edition,
Prentice-Hall, Inc., Englewood Cliffs, NJ 07632, U.S.A., 1992,
ISBN 0-13-747270-6